FILE: TL02/TLP/006/TLPHC-006R-XXP-X

REV	E.C.N NO.	CONTENT	CHK	DATE
V1.0	/	ORIGINAL	SHIKE	16.07.04

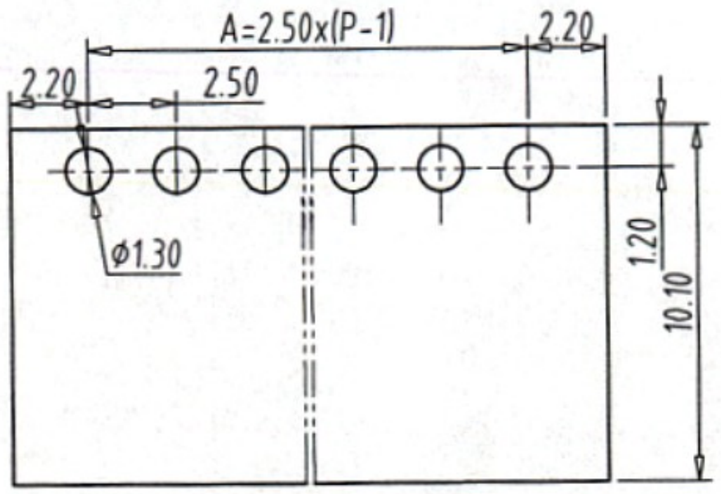

PCB LAYOUT
S=3:1

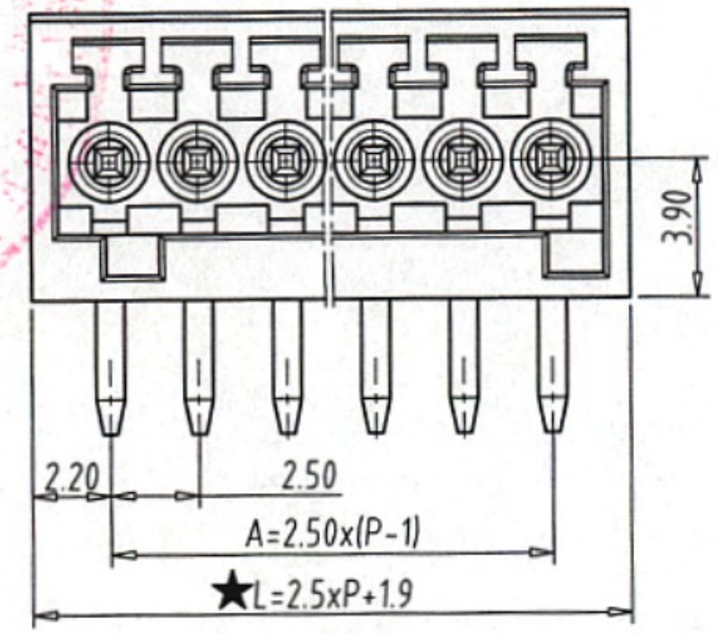

NOTES:

1.Rating:150V 5A (UL);PITCH: 2.50mm
2.Insulation Withstands Voltage: AC1300V/MIN
3.Insulation Resistance: 500MΩ or more at DC500V
4.Using Temperature Range: -40°C--+105°C
5 .RoHS Compliance
6.."★ "the important dimension.

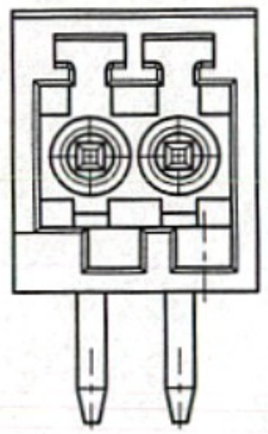

2P

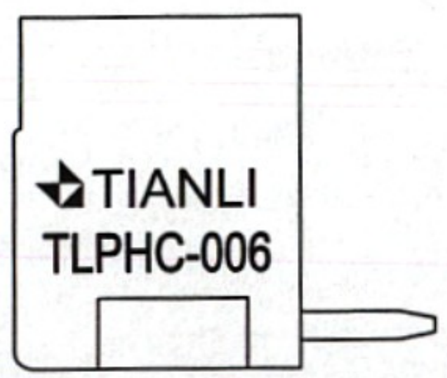

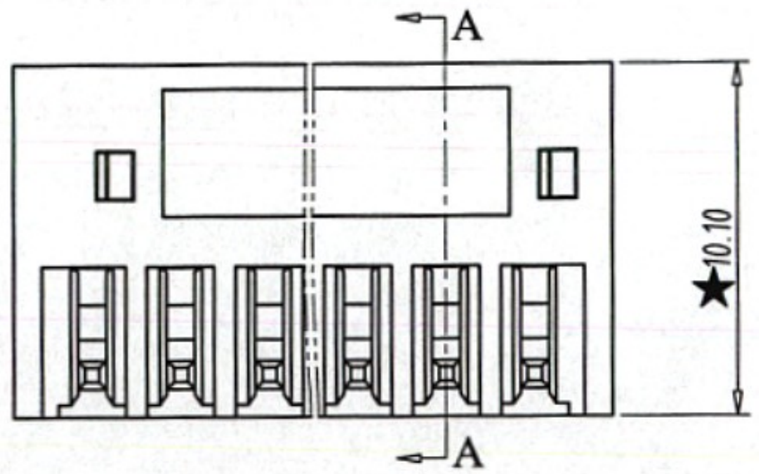

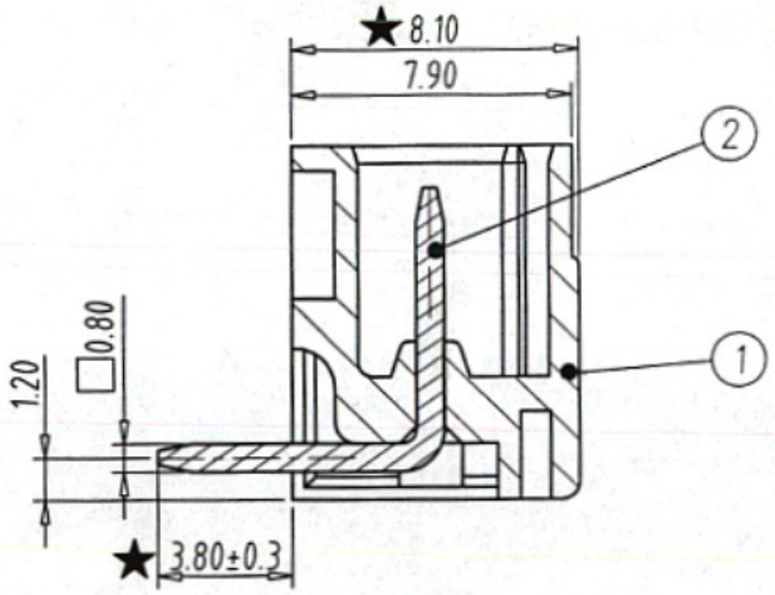

SECTION:A-A

DIM \ P	2	3	4	5	6	7	8	9	10	11	12
L	6.9	9.4	11.9	14.4	16.9	19.4	21.9	24.4	26.9	29.4	31.9
A	2.5	5	7.5	10	12.5	15	17.5	20	22.5	25	27.5

DIM \ P	13	14	15	16	17	18	19	20	21	22	23	24
L	34.4	36.9	39.4	41.9	44.4	46.9	49.4	51.9	54.4	56.9	59.4	61.9
A	30	32.5	35	37.5	40	42.5	45	47.5	50	52.5	55	57.5

Total Pitch Tolerances in mm									Nominal dimension range in mm									⊥		⌰	—		//
over 0 to 30	over 30 to 53	over 53 to 70	over 70 to 90	over 90 to 115	over 115 to 150	over 150 to 200	over 200 to 250	over 250 to 320	over 0 to 30	over 30 to 53	over 53 to 70	over 70 to 90	over 90 to 115	over 115 to 150	over 150 to 200	over 200 to 250	over 250 to 320	over 0 to 10	over 10	all	over 0 to 100	over 100 to 150	over 150
±0.18	±0.20	±0.25	±0.3	±0.35	±0.44	±0.55	±0.70	±0.75	±0.20	±0.25	±0.30	±0.35	±0.44	±0.55	±0.70	±0.80	±0.90	0.2	0.3	0.3	0.2	0.3	0.5

ITEM	NAME OF PART	NO. OF PART	Q"TY	MATERIAL	NOTE
2	PIN	TL015B0019	P	COPPER	TIN PLATED
1	HOUSING	TL015D8XXX	1	PA66(V0)	

DWG.	Lihw	DATE	14.09.03	UNITS	MM	SHEET/OF	1/1
CHK.		DATE		SCALE	1:1	A4	
APP.		DATE	16.07.04	NAME	TLPHC-006R-XXP-X		
TIANLI ELECTRICAL MACHINERY(NINGBO)CO.,LTD.				DWGNO	TL-02-TLPHC006RX		