序号/RevNo.	名称/Title	文件编号/File No.

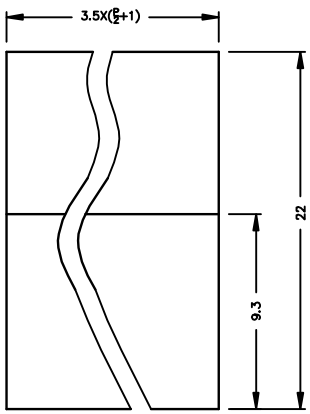

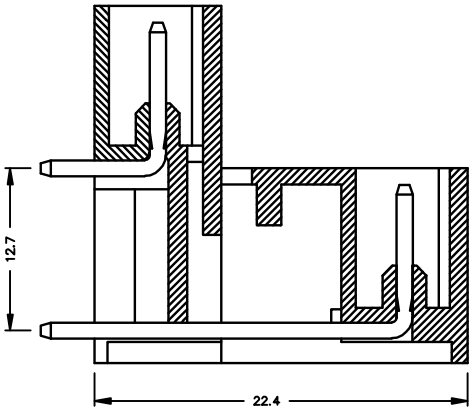

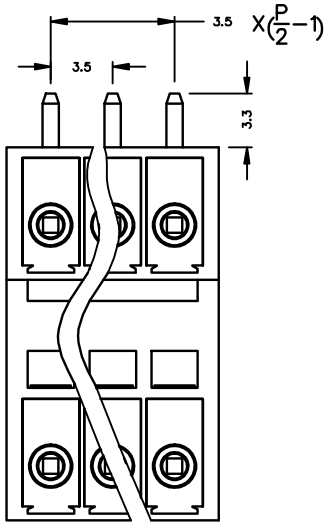

300V 8A

Pl1es: 2*(2-24P)

Pitch: 3.5mm(.138")

Material

Housing: PA66(UL 94V-0)

solder Pin: Brass,Tin Plated

设计/Designed by	绘图/Drawing by	审核/Checked by	批准/Approved by	未注公差 General Tolerance	
				x. ±0.2	x.° ±2°
新莱亚电子科技 XINLAIYA ELECTRONIC CO.,LTD		图名/File name	文件编号/File No.	.x ±0.1	.x° ±1°
		XY2500TRF-3.5		.xx ±0.05	.xx°±0.5°
			页序/Sheet	.xxx ±0.01	
		备注/Remark		单位/Units: mm	

序号/RevNo.	更改记录/Revision note	签名/Signature	日期/Date