REV.	ZONE	DESCRIPTION	DESIGN	DATE
B		NEW	James	09/16-13

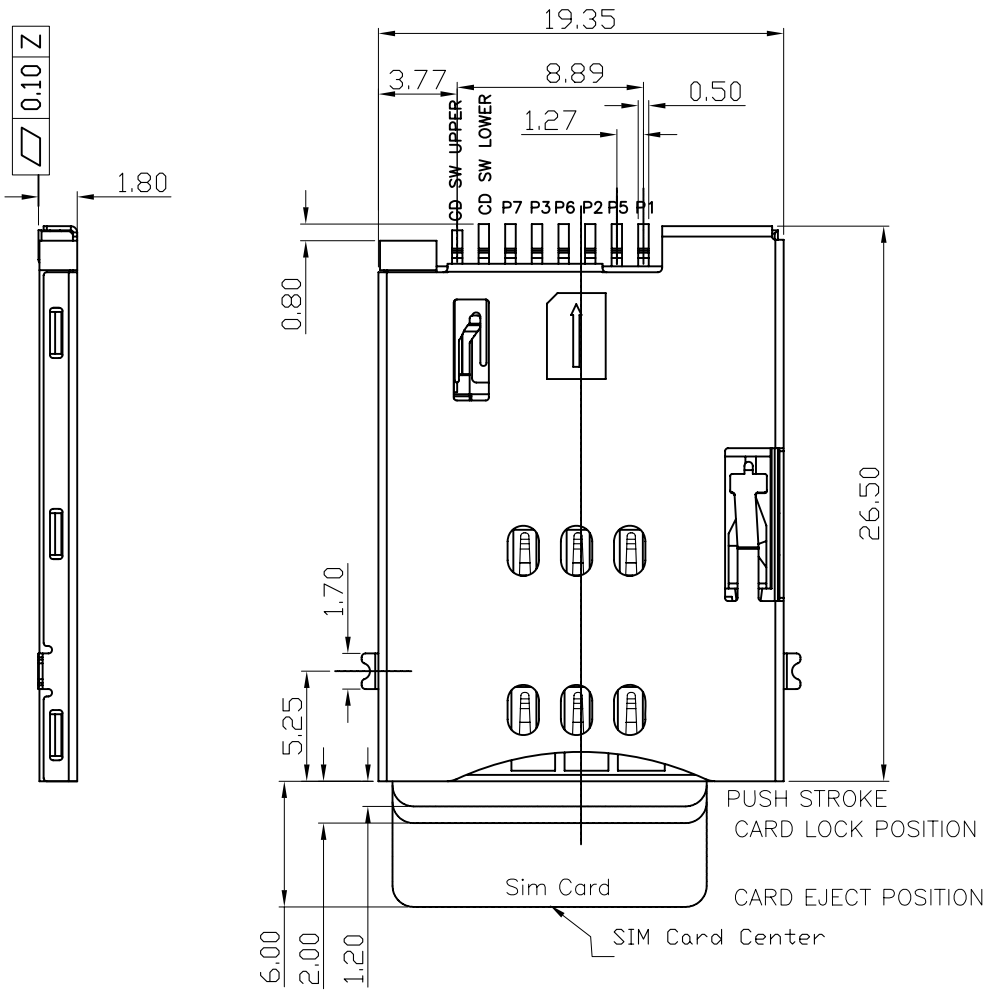

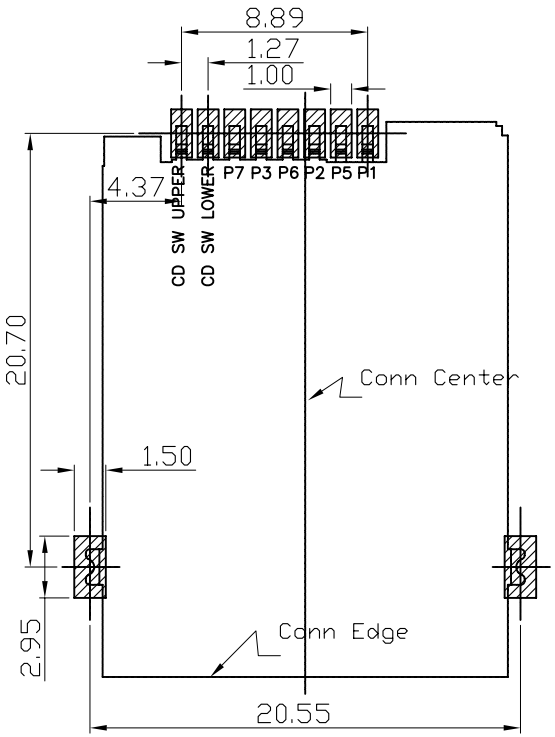

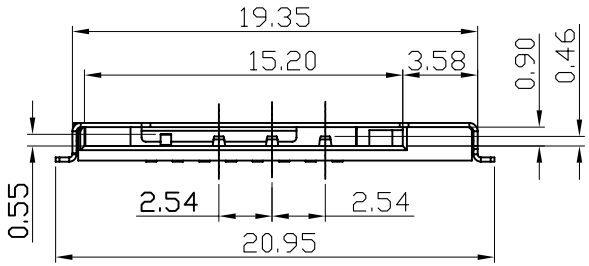

Circuit Diagram for Card Detect Switch

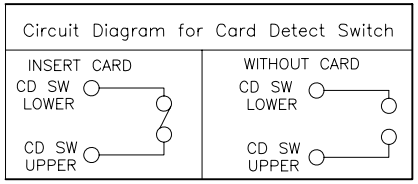

Connector terminal NO.	Pin NO.
Pin 1	VCC:PWR signal
Pin 2	RST:Reset signal
Pin 3	CLK:Clocking signal
Pin 5	GND
Pin 6	VPP:Porgromming Voltage
Pin 7	I/O:Serial date input/output

NOTE

1. ELECTRICAL:
   CURRENT RATING: 0.5A
   INSULATOR RESISTANCE: 1000MΩ MIN.
   WITHSTANDING VOLTAGE: 500 VAC / MINUTE
   CONTACT RESISTANCE:100mΩ MIN.
2. OPERATING TEMPERATURE:-40°C~+60°C
3. RoHS 2002/95/EC COMPLIANT.
4. PACKAGE:750pcs/REEL&TAPE.

PART	PART NAME	Material	QTY
7	SIM P/P SPRING	SWP	1PCS
6	SIM P/P LINK	SUS304	1PCS
5	SIM P/P SHELL	SUS304	1PCS
4	SIM P/P SIM_TERMINAL	C5210	1SET
2	SIM P/P SLIDER	PA9T	1PCS
1	SIM P/P HOUSING	LCP	1PCS

RoHS Compliant

TeT 东莞市特图精密电子有限公司
Precision Electronics
DongGuan Tet Precision Electronics co.,Ltd

Unless otherwise specified tolerances are

X.	±0.25
X.X	±0.20
X.XX	±0.15
X.XXX	±0.10
X°	±2.0°
X.X°	±1.0°

DRAW NO.	FD130916-004	DATE
DWN	James	09/16-13
CHK		
APVD		

DRAW NAME: SIM CARD 6P+2P PUSH TYPE W/O POST 1.8H

P/N : 1050601AR005

Third Angle Project

FINISH	MATERIAL	UNIT	SCALE	REV	SHEET
SEE NOTES		mm	1:1	B	1 OF 1