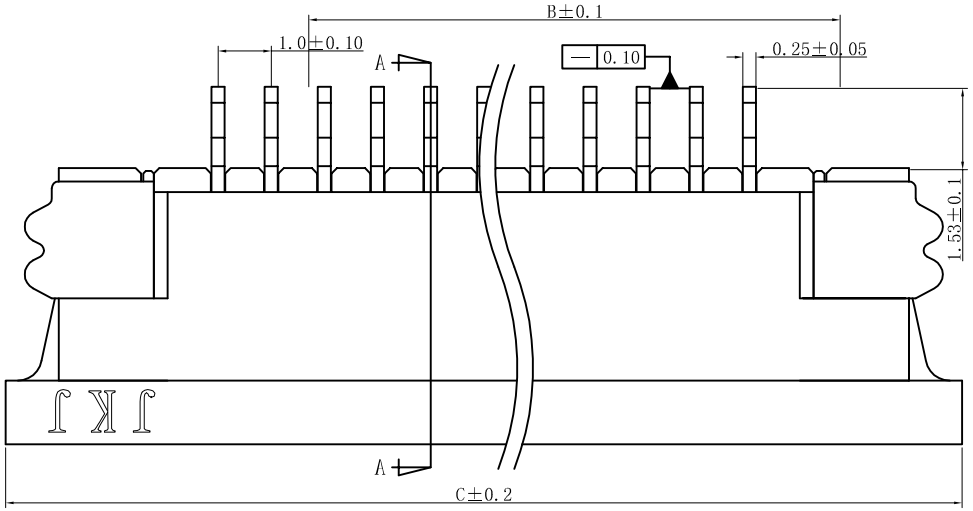

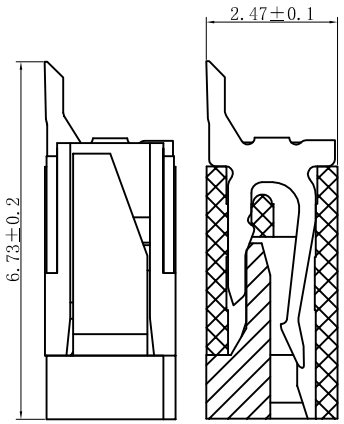

NO	胶体材质	锁扣材质	胶体颜色	锁扣颜色	柱子
1	LCP	LCP	本色	黑色	
2	PA9T	LCP	本色	黑色	

88353-XXX X X -X

PIN数

电镀：1镀金　2镀雾锡　3镀亮锡

包材：A管装 B袋装 C盒装

NO. of Contacts (n)	Dimensions		
	A	B	C
4	5.1	3.0	11.0
5	6.1	4.0	12.0
6	7.1	5.0	13.0
7	8.1	6.0	14.0
8	9.1	7.0	15.0
9	10.1	8.0	16.0
10	11.1	9.0	17.0
11	12.1	10.0	18.0
12	13.1	11.0	19.0
13	14.1	12.0	20.0
14	15.1	13.0	21.0
15	16.1	14.0	22.0
16	17.1	15.0	23.0
17	18.1	16.0	24.0
18	19.1	17.0	25.0
19	20.1	18.0	26.0
20	21.1	19.0	27.0
21	22.1	20.0	28.0
22	23.1	21.0	29.0
23	24.1	22.0	30.0
24	25.1	23.0	31.0
25	26.1	24.0	32.0
26	27.1	25.0	33.0
27	28.1	26.0	34.0
28	29.1	27.0	35.0
29	30.1	28.0	36.0
30	31.1	29.0	37.0
31	32.1	30.0	38.0
32	33.1	31.0	39.0

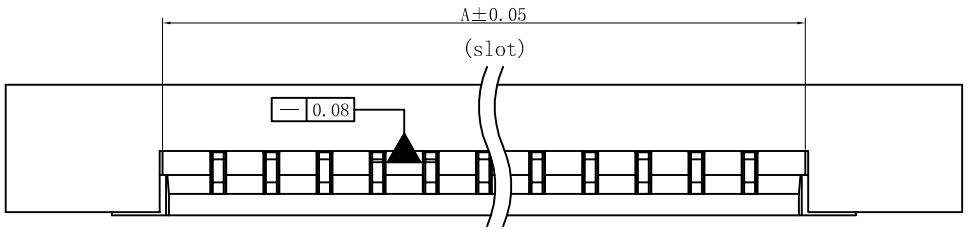

Electrical

Voltage:50 V AC(rms)/DC
Current:0.5 A AC(rms)/DC
Contact Resistance:20 mΩ max(initial)
Dielectric Withstanding Voltage:250 V AC/rms
Insulation Resistance:50 MΩ min
Operating Temp:-20° C～+85° C

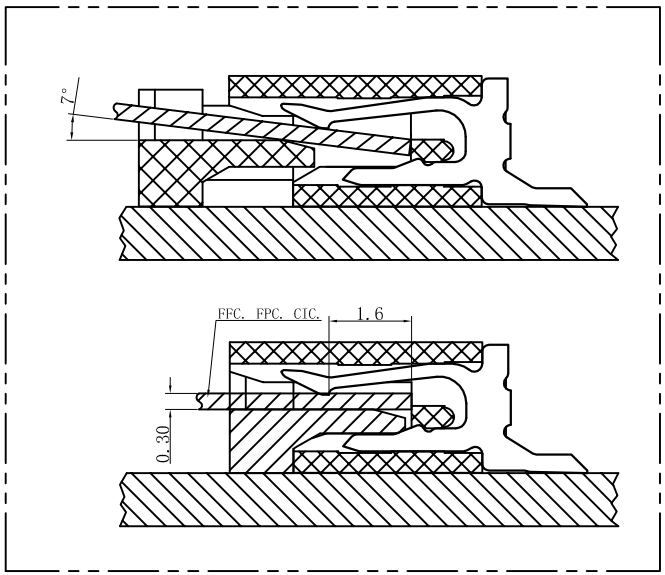

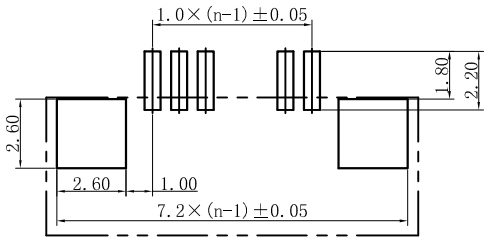

PC BOARD LAYOUT

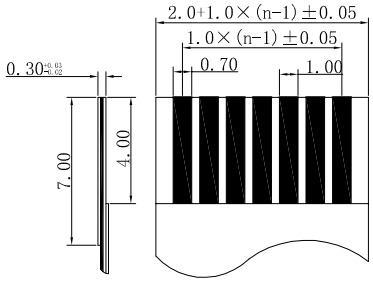

SER	AREA	REVISIONS	CHK	DATE

UNLESS OTHERWISE SPECIFIED TOLERANCES ARE

X. ±0.2
X.X ±0.1
X.XX ±0.05

ANG.
X ±0.5
X.X ±0.1

JKJ® 金科基电子有限公司

APPROVED	DATE	NAME
		FPC1.0拉拔式半包上接
CHECKED	DATE	
DRAWN 周建锋	DATE 2006/07/17	DRAWTING NO 88353-XXXXX-X

UNIT	SCALE	SIZE	REV
MM	5:1	A4	A